B777

Electrical

DO NOT USE FOR FLIGHT

Electrical Panel

[IFE/PASS SEATS and CABIN/UTILITY switches basic with C/L 350]

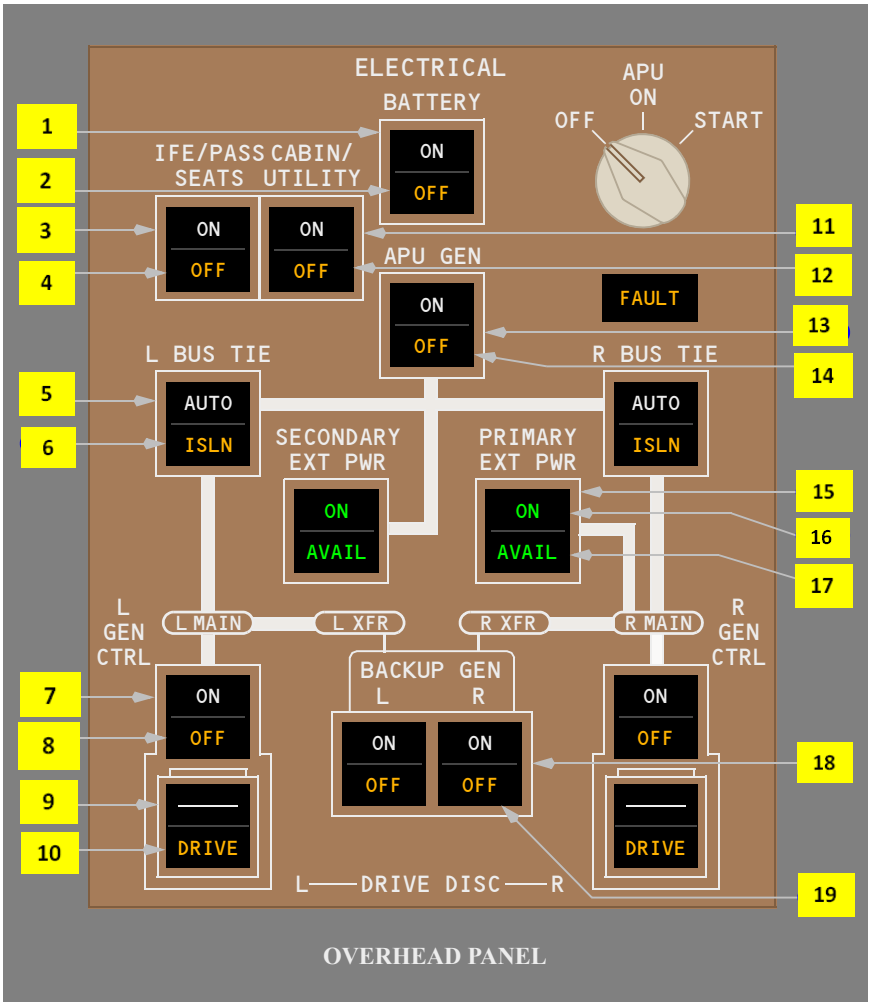

1 BATTERY Switch

ON –

- Unpowered airplane on the ground:
  - a few switch annunciator lights illuminate

- allows the APU to be started
- no displays are powered.

- Powered airplane in flight or on the ground when AC power is removed or lost:
  - the standby busses and emergency lighting are powered
  - the left inboard, outboard, and upper center displays, and the left CDU are powered.

OFF – turns battery power off. In flight, the EICAS message ELEC BATTERY OFF displays.

2 Battery OFF Light

Illuminated (amber) – the battery switch is OFF.

3 In-Flight Entertainment System/Passenger Seats (IFE/PASS SEATS) Power Switch

ON – powers IFE, passenger seat, ground maneuver camera, and flight deck entry video surveillance systems when AC power is available.

OFF – removes power from IFE, passenger seat, ground maneuver camera, and flight deck entry video surveillance systems.

4 IFE/PASS SEATS OFF Light

Illuminated (amber) – the IFE/PASS SEATS Power switch is OFF.

5 BUS TIE Switches

AUTO – arms automatic AC bus tie circuits.

ISLN (isolation) (AUTO not visible) – commands the bus tie open.

6 Bus Isolation (ISLN) Lights

Illuminated (amber) –

- bus tie breaker is locked open (ISLN selected with bus tie switch), or
- a fault has occurred, automatically opening the bus tie breaker.

7 Generator Control (GEN CTRL) Switches

ON – arms the generator breaker to close automatically when generator power is available.

OFF –

- opens field and generator breakers
- resets fault trip circuitry.

8 Generator OFF Lights

Illuminated (amber) – the generator breaker is open.

9 Drive Disconnect Switches

Push –

- disconnects the integrated drive generator (IDG) input from the engine
- requires maintenance action on the ground to reconnect the IDG.

10 Generator DRIVE Lights

Illuminated (amber) – IDG oil pressure is low.

11 Cabin/Utility (CABIN/UTILITY) Power Switch

ON – powers cabin and utility systems when AC power is available.

OFF – removes power from cabin and utility systems and turns on some cabin lighting.

12 CABIN/UTILITY Power OFF Light.

Illuminated (amber) – CABIN/UTILITY power switch is selected OFF.

13 APU Generator (APU GEN) Switch

ON – arms APU generator breaker to automatically close.

OFF – opens APU generator breaker.

14 APU Generator OFF Light

Illuminated (with the APU running) (amber) –

- the APU generator breaker is open because of a fault, or
- the APU GENERATOR switch is selected OFF.

15 External Power (EXT PWR) Switches

Push – if AVAIL light is illuminated, closes external power contactor. Subsequent action opens external power contactor.

ON – external power is connected to the bus(ses).

OFF (ON not visible) – external power is disconnected from the bus(ses).

16 External Power ON Lights

Illuminated (green) – external power is powering the busses.

17 External Power AVAIL Lights

Illuminated (green) –

- external power is plugged in and power quality is acceptable
- extinguishes when the ON light illuminates.

18 Backup Generator (BACKUP GEN) Switches

ON – backup generator operation is armed.

OFF –

- opens the backup generator control relay
- resets the fault circuitry.

19 Backup Generator OFF Lights

Illuminated (amber) –

- the backup generator has failed, or
- a circuit fault has been detected, or
- backup generator switch selected off, or
- both OFF lights illuminated – backup system (converter) has failed.

Overhead Maintenance Panel

Standby Power Switch

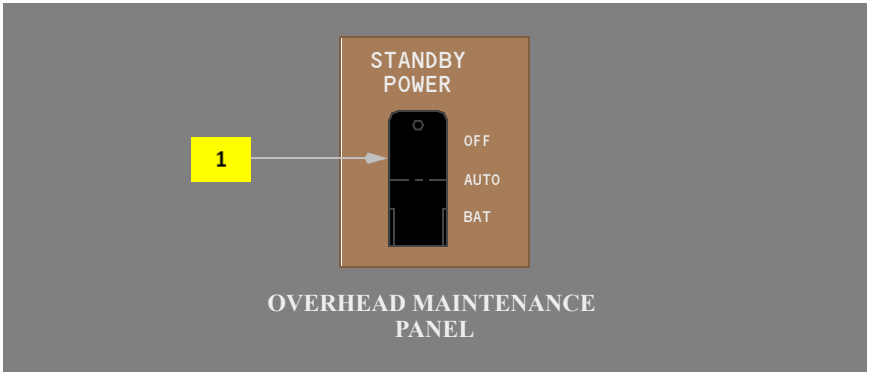

1 STANDBY POWER Switch

Note: Ground operation only.

OFF – the AC standby bus is not powered.

AUTO (guarded) – the standby busses transfer to battery power if normal AC power is lost.

BAT (momentary) –

- the standby busses are powered from the battery if AC power is not available
- initiates a DC/standby self-test if AC power is available.

Towing Power Switch

[Option]

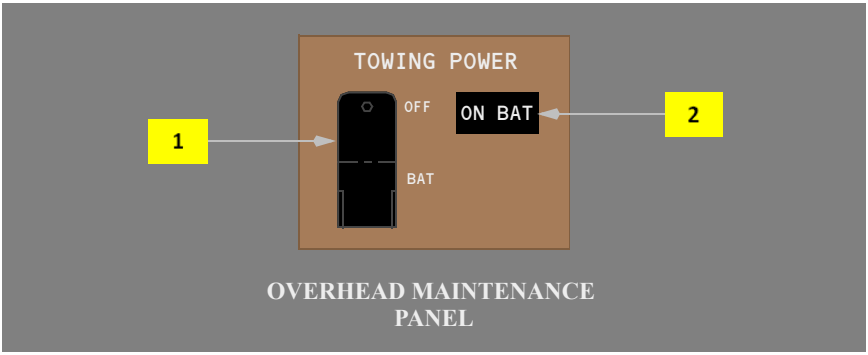

1 TOWING POWER Switch (Ground Operation Only)

OFF – main battery disconnected from towing bus.

BAT – main battery power provided to the following:

- position lights
- flight interphone
- Captain's instrument panel flood lights
- brake accumulator pressure indicator
- brake source light

2 Towing Power ON BAT Light

Illuminated (white) – towing bus powered by main battery through the hot battery bus.

Medical Outlet Power Control

[Option - other switch configurations are available]

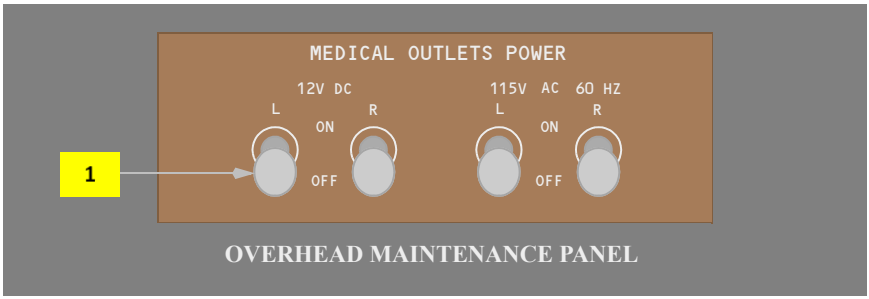

1 MEDICAL OUTLETS POWER Switches

ON – Power is available to all associated passenger cabin medical outlets.

OFF – Medical outlet power is not available.

Electrical Synoptic Display

The electrical synoptic is displayed by pushing the ELEC synoptic display switch on the display select panel.

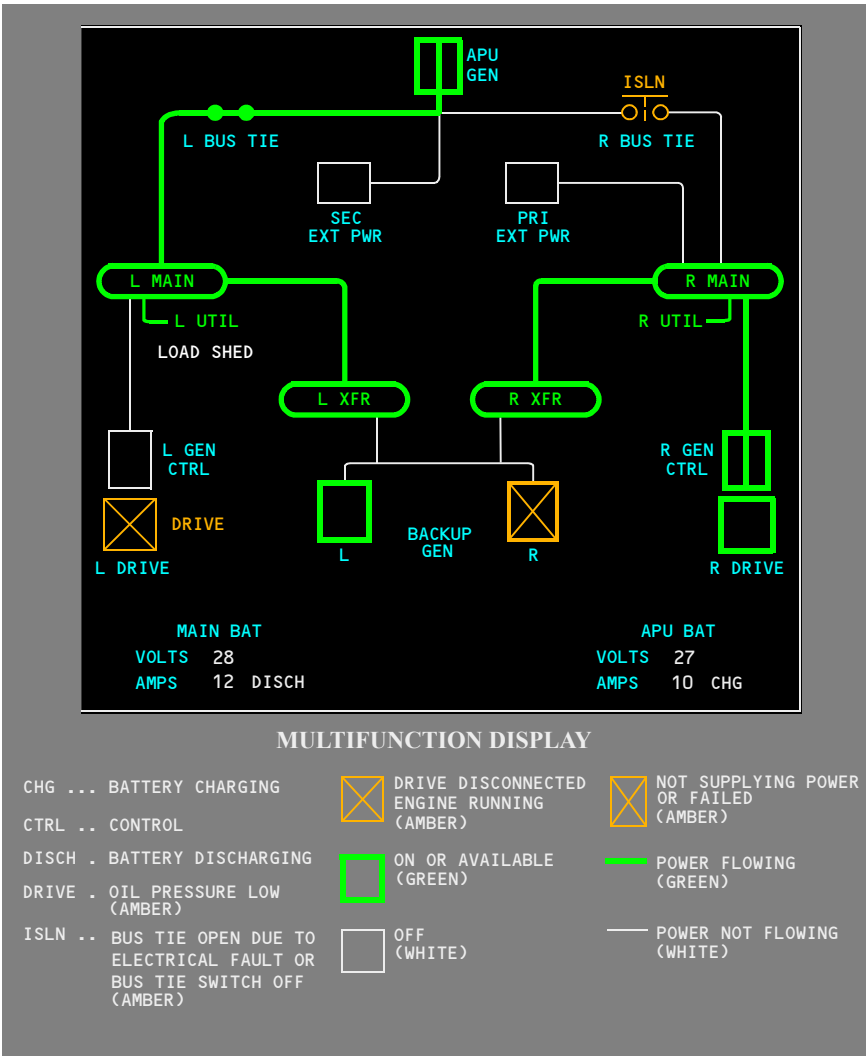

Introduction

The electrical system generates and distributes AC and DC power to other airplane systems, and is comprised of: main AC power, backup power, DC power, standby power, and flight controls power. System operation is automatic. Electrical faults are automatically detected and isolated.

AC Electrical System

The AC electrical system is the main source for airplane electrical power.

Electrical Load Management System (ELMS)

The ELMS provides load management and protection to ensure power is available to critical and essential equipment.

If the electrical loads exceed the power available (airplane or external), ELMS automatically sheds AC loads by priority until the loads are within the capacity of the airplane or ground power generators. The load shedding is galleys first, then utility busses. Utility busses are followed by individual equipment items powered by the main AC busses. When an additional power source becomes available or the loads decrease, ELMS restores power to shed systems (in the reverse order). The message LOAD SHED displays on the electrical synoptic when load shed conditions exist.

The ELMS also provides inputs for display of EICAS messages for manual center tank fuel pump shut off during climb/cruise, and automatic shut off to prevent unintentional dry fuel pump operation when the center fuel tank is empty.

AC Electrical System Power Sources

The entire airplane AC electrical load can be supplied by any two main AC power sources.

The main AC electrical power sources are:

- left and right engine integrated drive generators (IDGs)
- APU generator
- primary and secondary external power.

The power sources normally operate isolated from one another. During power source transfers on the ground (such as switching from the APU generator to an engine generator) operating sources are momentarily paralleled to prevent power interruption.

Integrated Drive Generators (IDGs)

Each engine has an IDG. Each IDG has automatic control and system protection functions.

When an engine starts, with the GENERATOR CONTROL switch selected ON, the IDG automatically powers the respective main bus. The previous power source is disconnected from that bus.

The IDG can be electrically disconnected from the busses by pushing the GENERATOR CONTROL switch to OFF. The IDG can also be electrically disconnected from its respective bus by selecting an available external power source prior to engine shutdown. (See Primary External Power and Secondary External Power in this section.)

The DRIVE light illuminates and the EICAS message ELEC GEN DRIVE L or R displays when low oil pressure is detected in an IDG. The IDG drive can be disconnected from the engine by pushing the respective DRIVE DISCONNECT switch. The IDG cannot be reconnected by the flight crew.

High drive temperature causes the IDG to disconnect automatically.

APU Generator

The APU generator is electrically identical to the IDG generators. The APU generator can power either or both main busses, and may be used in flight as a replacement to an IDG source.

If no other power source is available when the APU generator becomes available, the APU generator automatically connects to both main AC busses. If the primary external source is powering both main busses, the APU powers the left main bus, and the primary external source continues to power the right main bus. If the primary external source is powering the right main bus, and the secondary external source is powering the left main bus, the APU then powers the left main bus and the primary external source continues to power the right main bus. If the secondary external source is powering both main busses, the APU then powers both main busses.

The APU generator OFF light illuminates when the APU is operating and the APU generator breaker is open because of a fault or the APU GENERATOR switch is selected OFF. When the APU GENERATOR switch is ON and a fault is detected, the APU generator cannot connect to the busses.

In flight, when both transfer busses are unpowered, the APU starts automatically, regardless of APU selector position.

Primary External Power

Primary external power can power the left and right main busses. When the primary power source voltage and frequency are within limits, the primary external power AVAIL (available) light illuminates. If no AC power is applied, either external power source will power the airplane if the BATTERY switch is ON.

If no other source is powering the main busses, with the BATTERY switch ON, pushing the PRIMARY EXTERNAL POWER switch ON connects primary external power to both main busses. When primary external power is connected to a main bus, the PRIMARY EXTERNAL POWER ON light illuminates and the AVAIL light extinguishes.

If a single IDG powers both busses, pushing the PRIMARY EXTERNAL POWER switch ON connects primary external power to both busses and removes the IDG source.

If both IDGs are powering their respective busses, the APU generator is NOT running and secondary external power is NOT available, pushing the PRIMARY EXTERNAL POWER switch ON connects primary external power to both busses and removes the IDG sources.

If both IDGs are powering their respective busses, and secondary external power is available, pushing the PRIMARY EXTERNAL POWER switch to ON connects primary external power to the right main bus, leaving the left main bus powered from the left IDG.

If the APU generator is running, pushing the PRIMARY EXTERNAL POWER switch ON connects primary external power to the right main bus, leaving the previous source connected to the left main bus.

If both busses are powered from secondary external power, pushing the PRIMARY EXTERNAL POWER switch ON connects primary external power to the right main bus, leaving secondary external power connected to the left main bus.

Pushing the PRIMARY EXTERNAL POWER switch while primary external power is ON, disconnects primary external power. The previously connected power source is reconnected, if available.

Secondary External Power

Secondary external power can power the left and right main busses. When the secondary external power source voltage and frequency are within limits, the secondary external power AVAIL (available) light illuminates.

If no AC power is applied, the BATTERY switch must be ON or primary external power must be available for secondary external power to power the airplane. If the BATTERY switch is ON and no other source is powering the main busses, pushing the SECONDARY EXTERNAL POWER switch ON connects secondary external power to both main busses. When secondary external power is connected to a main bus, the SECONDARY EXTERNAL POWER ON light illuminates and the AVAIL light extinguishes.

If a single IDG powers both main busses, pushing the SECONDARY EXTERNAL POWER switch ON connects secondary external power to both busses and removes the IDG source. Similarly, if only secondary external power is available and both IDGs are powering their respective busses, pushing the SECONDARY EXTERNAL switch ON connects secondary external power to the left main bus. When the right engine is shut down, there is a no–break transfer of power of secondary external power to the right main bus.

If both IDGs are powering their respective busses, and both secondary and primary external power are available, pushing the SECONDARY EXTERNAL POWER switch ON connects secondary external power to the left main bus, leaving the right main bus powered from the right IDG.

If the APU generator is running, pushing the SECONDARY EXTERNAL POWER switch ON connects secondary external power to the left main bus, leaving the right IDG or primary external power connected to the right main bus.

If both busses are powered from primary external power, pushing the SECONDARY EXTERNAL POWER switch ON connects secondary external power to the left main bus, leaving primary external power connected to the right main bus. If no other source is available, secondary external power is connected to both main busses.

Pushing the SECONDARY EXTERNAL POWER switch while secondary external power is ON disconnects secondary external power. The previously connected power source is reconnected, if available.

AC Electrical Power Distribution

AC power is distributed through the left and right main busses and the ground service bus.

AC Main Busses

The right IDG normally powers the right main bus and the left IDG normally powers the left main bus. The APU normally powers both main busses when they are not powered by any other source.

When external power is connected:

- primary external power normally powers the right main bus
- secondary external power normally powers the left main bus.

Bus tie relays, controlled by BUS TIE switches, isolate or parallel the right and left main busses. When both BUS TIE switches are set to AUTO, the bus tie system operates automatically to maintain power to both main busses.

Power transfers are made without interruption when the airplane is on the ground, except when switching between primary and secondary external power sources.

The source order for powering left and right main busses in flight is the:

- respective IDG
- APU generator
- opposite IDG.

The main busses power individual equipment items such as:

- cooling vent fan
- recirculation fans
- lavatory/galley fans
- electric hydraulic pumps
- IFE

Each main bus also powers its associated busses (typical loads are shown in parentheses):

- transfer bus (DC system transformer–rectifiers, AC standby bus)
- utility bus (forward galley heater, chiller boost fan, gasper fan, captain's and first officer's foot and shoulder heaters, door area heaters, lavatory water heaters and shavers)
- galley busses.

Ground Service Bus

The ground service bus is normally powered by the right main bus. Alternate sources of power for the ground service bus are:

- the APU generator
- primary external power.

The ground service bus powers:

- the main battery charger
- the APU battery charger
- miscellaneous cabin and system loads.

Ground Handling Bus

The ground handling bus can be powered on the ground only from the APU generator or from the primary external power source. It is provided for loads such as cargo handling, fueling/defueling operations, and other equipment energized only during ground operations.

Autoland

During autoland, the busses isolate to allow three independent sources to power the three autopilots:

- the left IDG powers the left AC transfer bus, the left main DC bus, and the captain's flight instrument bus
- the right IDG powers the battery bus and AC standby bus through the main battery charger
- the backup system powers the right AC transfer bus, the right DC bus, and the first officer's flight instrument bus.

AC Electrical System Schematic

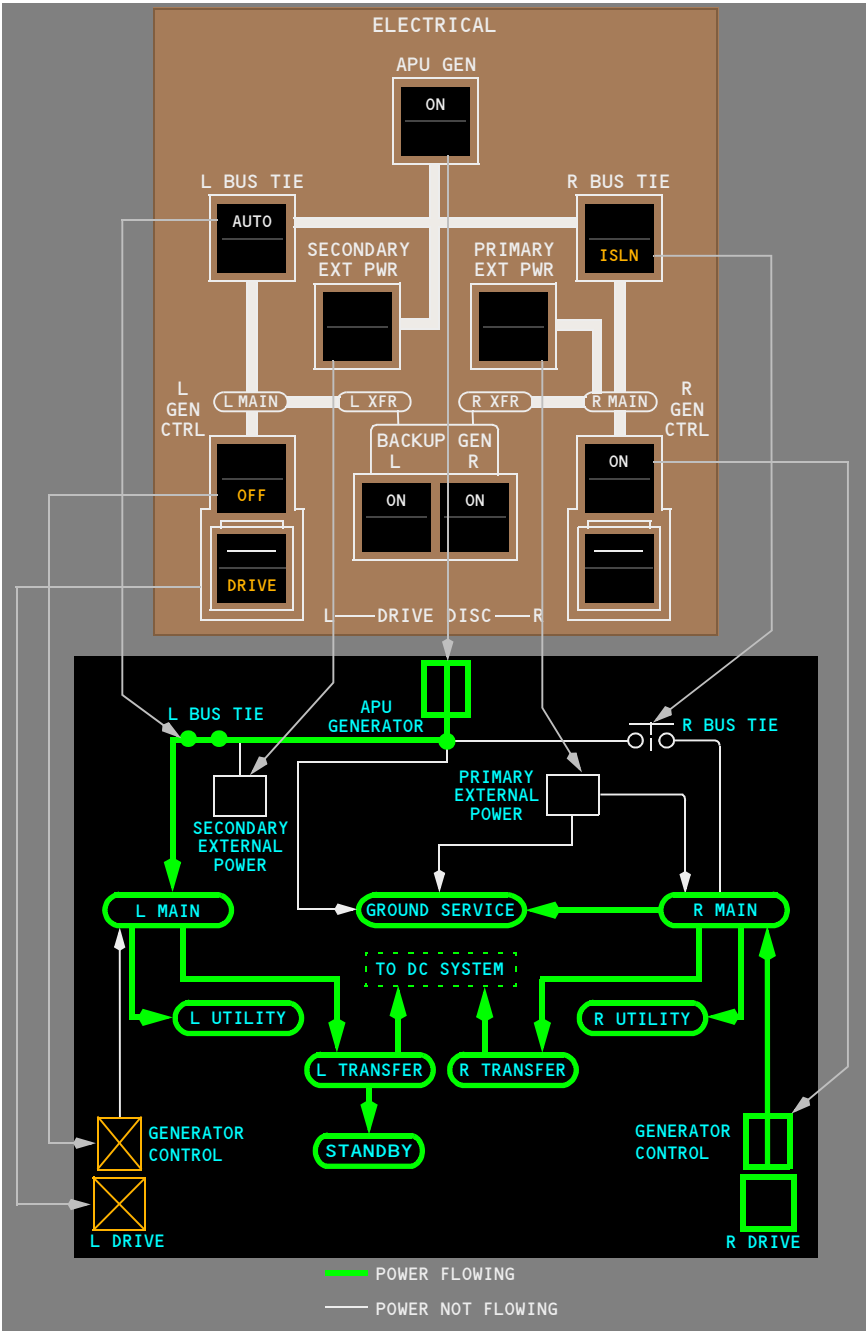

Backup AC Electrical System

The backup electrical system is designed to automatically provide power to selected airplane systems. The backup electrical system automatically powers one or both transfer busses when:

- only one main AC generator (includes APU) is available
- power to one or both of the main AC busses is lost
- approach (APP) mode is selected for autoland
- the system is automatically tested after engine starts.

The system transfers power without interruption.

Backup Generators

Backup power is provided by one variable speed, variable frequency generator mounted on each engine. A frequency converter converts the generator frequency to a constant 400 Hz. Only one backup generator can power the converter at a time.

Each backup generator contains two permanent magnet generators (PMGs) that supply power to the flight control DC electrical system (refer to DC Electrical System).

If both IDGs and the APU generator are inoperative, a backup generator powers essential airplane equipment. To reduce electrical loading on the backup generator, the following systems are inoperative:

- TCAS
- SATCOM
- Right HF radio

[HF Datalink installed]

- Right HF radio and associated datalink
- Center tank override/jettison pumps (center tank fuel is unusable and cannot be jettisoned)

[777-200LR]

- Center tank override/jettison pumps (center tank and auxiliary fuel is unusable and cannot be jettisoned)
- Position and other exterior lights (except nose gear landing lights)
- All non-essential cabin equipment (galleys, entertainment systems, etc.)
- Passenger cabin lighting (except night, galley and cross-aisle lights)
- Cabin temperature control (remains operative, but in degraded mode)

Backup AC Electrical System Schematic

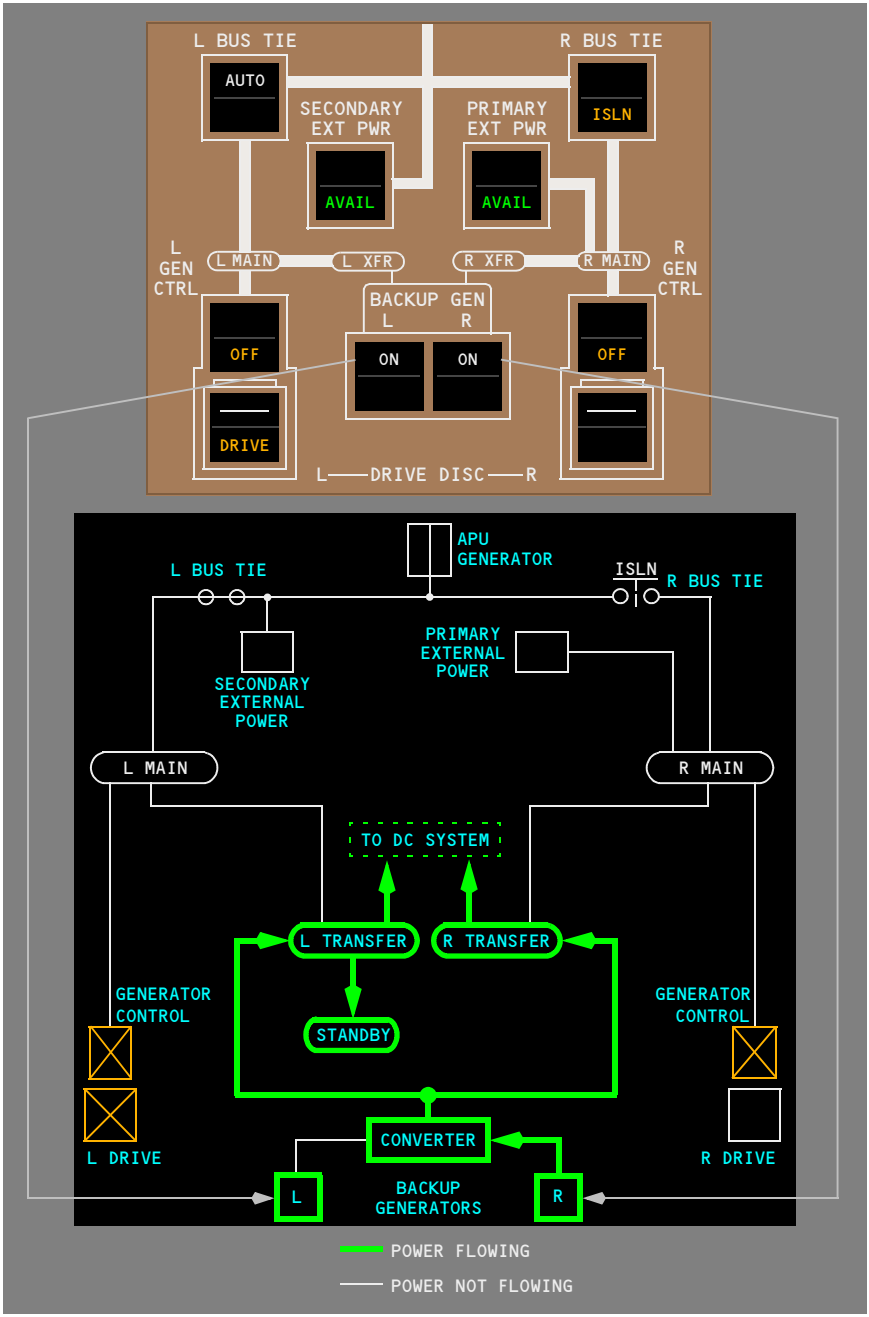

DC Electrical System

The DC electrical system includes the main DC electrical system and the flight control DC electrical system.

Main DC Electrical System

The main DC electrical system uses four transformer–rectifier units (TRUs) to produce DC power. The TRUs are powered by the AC transfer busses.

Main DC Power Distribution

TRU DC electrical power is distributed to various DC busses as follows:

The left TRU powers the left main DC bus, which provides a second DC power source for:

- left flight control power supply assembly (PSA)
- right main DC bus.

The right TRU powers the right main DC bus, which provides a second DC power source for:

- right flight control PSA
- left main DC bus.

The C1 TRU powers the captain's flight instrument bus and the battery bus. The captain's flight instrument bus provides a second DC power source for:

- center flight control PSA
- first officer's flight instrument bus

The C2 TRU powers the first officer's flight instrument bus, which provides a second DC power source for the captain's instrument bus.

Batteries

The main battery is connected directly to the hot battery bus and provides standby power to other busses (See Standby Electrical System). The main battery charger normally powers the hot battery bus and maintains the main battery fully charged.

The APU battery is connected directly to the APU battery bus and provides dedicated power to the APU electric starter, which is used when sufficient bleed air duct pressure is unavailable for the APU air turbine starter. The APU battery charger normally powers the APU battery bus and maintains the APU battery fully charged.

Towing Power

[Option]

Permits towing operations without AC power. With the TOWING POWER switch selected to BAT position, main battery power is provided through the hot battery bus to systems required for towing. When AC power is applied to the airplane and the TOWING POWER switch is in BAT, the main battery provides back-up if AC power is lost during towing.

DC and Flight Control Electrical Systems Schematic

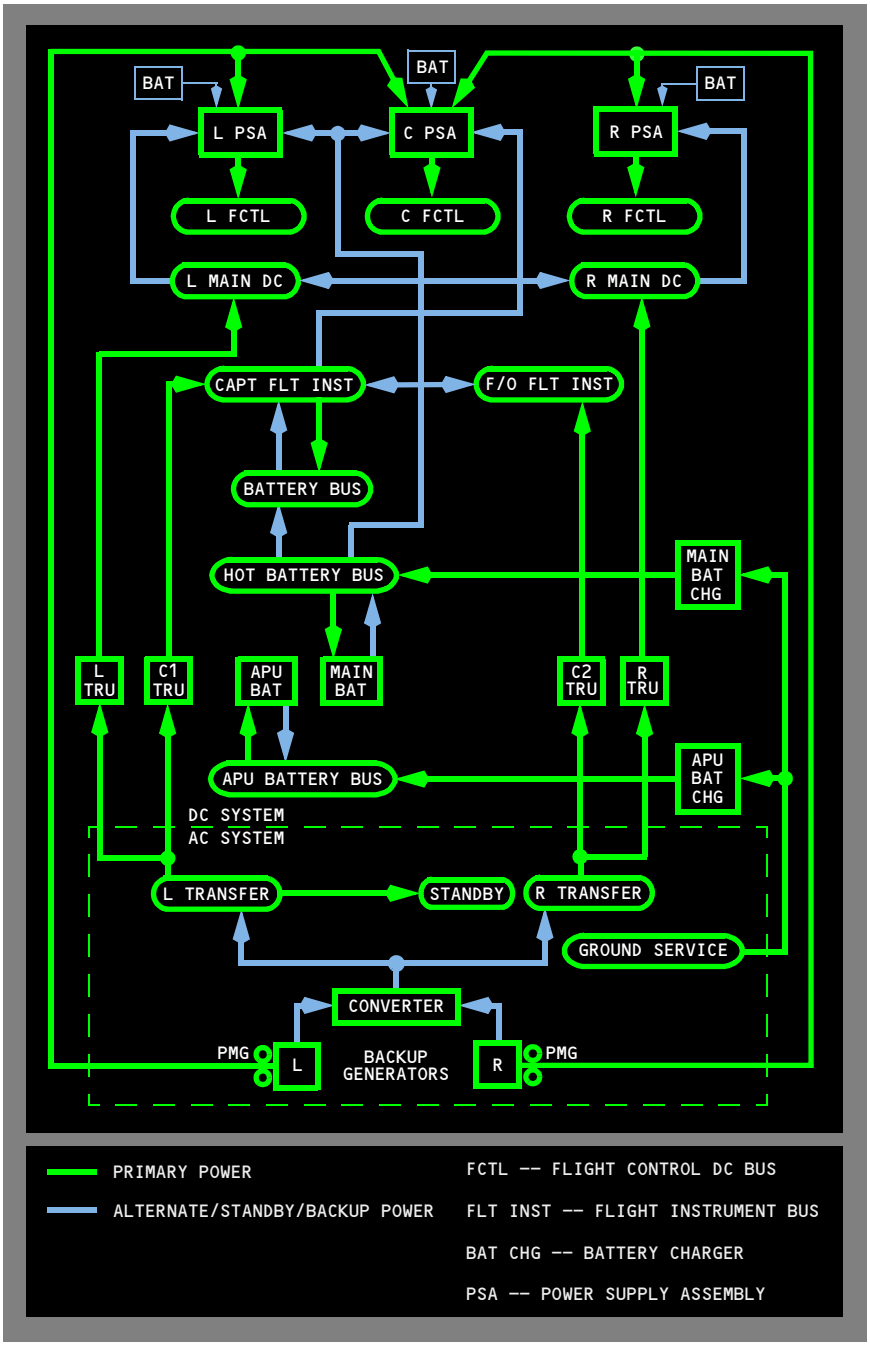

Flight Control DC Electrical System

The flight control DC electrical system is a dedicated power source for the primary flight control system.

Primary power for the flight control DC electrical system comes from permanent magnet generators (PMGs) housed within each backup generator. Variable frequency PMG AC power is used by individual power supply assemblies (PSAs) to provide DC power to the three flight control DC busses.

To ensure a high level of system reliability, each PSA also has multiple DC power sources. If primary PMG AC power is not available, secondary power for the left and right PSAs is provided by the related main DC bus. Secondary power for the center PSA is provided by the captain's flight instrument bus. The hot battery bus provides additional backup power for the left and center PSAs only.

Each PSA also uses a dedicated battery to prevent power interruptions to the related flight control DC bus. The batteries have limited capacity and are incorporated to supply power for brief periods during PSA power source transfers.

Standby Electrical System

The standby electrical system can supply AC and DC power to selected flight instruments, communications and navigation systems, and the flight control system, if there are primary electrical power system failures.

The standby electrical system consists of:

- the main battery
- the standby inverter
- the RAT generator and its associated generator control unit
- the C1 and C2 TRUs.

Standby Electrical System Schematic

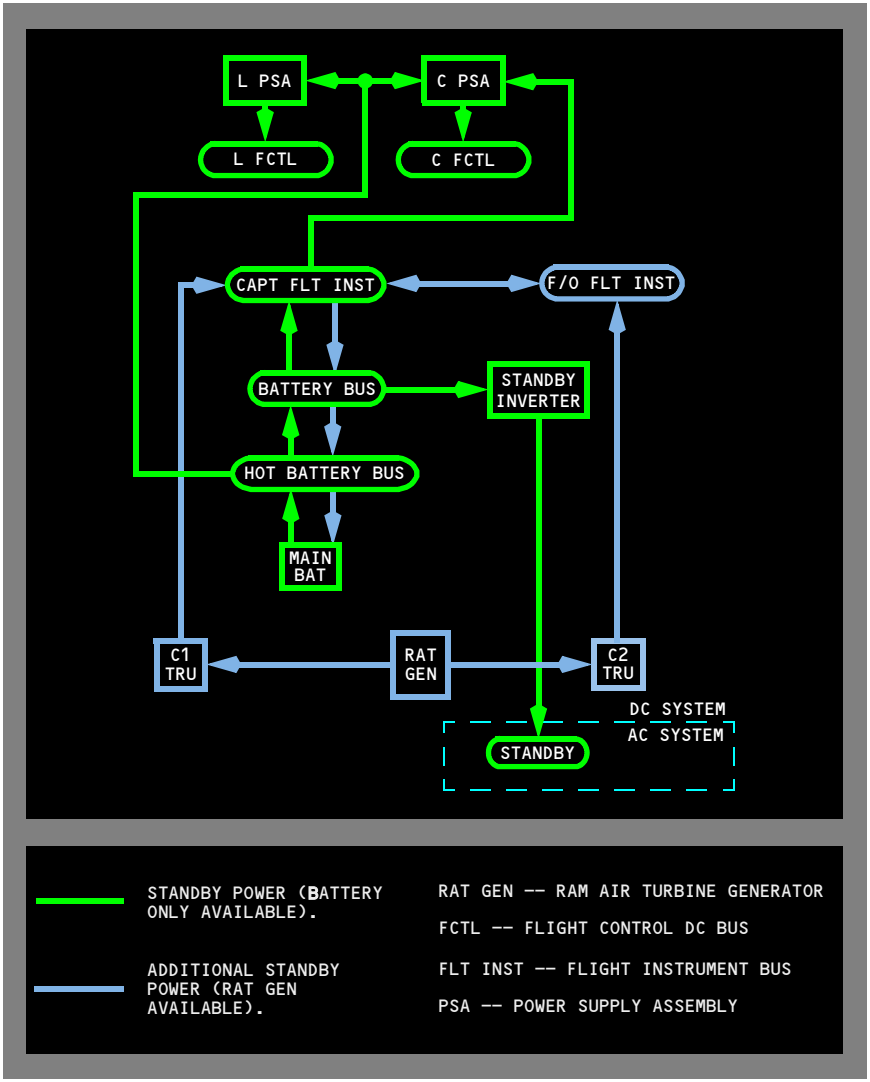

Main Battery

The main battery provides standby power to the following:

- hot battery bus
- battery bus
- captain's flight instrument bus
- left and center flight control PSAs
- standby inverter.

Standby Inverter

The standby inverter converts DC power to AC power. The inverter powers the AC standby bus if the left transfer bus is not powered.

Ram Air Turbine (RAT) Generator

The RAT generator provides standby power to the C1 and C2 TRUs. The RAT generator has no operating time limits, and operates at all airspeeds and altitudes.

The RAT can supply electrical and hydraulic power simultaneously. If the RAT is unable to maintain RPM, the RAT generator electrical load is shed until RPM is satisfactory. Power for standby electrical loads is provided by the main battery during deployment of the RAT and when RAT generator loads are shed.

The RAT is deployed automatically if both AC transfer busses lose power in flight. The RAT can be manually deployed by pushing the RAM AIR TURBINE switch on the overhead panel.

Cabin Systems and Utility Power

[IFE/PASS SEATS and CABIN/UTILITY switches basic with C/L 350]
Electrical power to various cabin and utility systems can be controlled from the flight deck.

IFE and Passenger Seats

The IFE/PASS SEATS Power switch controls power to the IFE and passenger seats. Pushing the switch OFF removes power from the following:

- IFE (all components)
- passenger seats (including seat motor power, personal computer power outlets, and telephones)

Cabin and Utility Systems

The CABIN/UTILITY Power switch controls power to various cabin and utility systems. Pushing the switch OFF removes power from items such as:

- ground service bus (except main and APU battery chargers, and left forward fuel pump)
- utility busses
- galleys

[Option]

- gasper fan
- fluorescent cabin lighting
- beacon, logo, and wing lights.

Additionally, when the CABIN/UTILITY power switch is selected OFF, the following cabin lights are turned on:

- night and supplemental night lights
- reading lights
- attendant work lights
- some galley/crew rest lights.

Flight Deck Video System Power

[-300 series airplanes with Flight Deck Entry Video Surveillance System]

The IFE/PASS SEATS Power switch controls power to the flight deck video system. Pushing the switch OFF removes power from the following:

- Ground maneuver camera system
- Flight deck entry video surveillance system.

Flight Deck Video Camera System Power

[-200 series airplanes with Flight Deck Entry Video Surveillance System]

The IFE/PASS SEATS Power switch controls power to the flight deck entry video surveillance system. Pushing the switch OFF removes power from the system.

Electrical EICAS Messages

The following EICAS messages can be displayed.

Electrical System

Message	Level	Aural	Condition
ELEC AC BUS L, R	Caution	Beeper	AC bus is unpowered.
ELEC BACKUP GEN L, R	Advisory		Backup generator has failed.
ELEC BACKUP SYS	Advisory		Backup power system has failed.
ELEC BATTERY OFF	Advisory		Battery switch is OFF.
ELEC BUS ISLN L, R	Advisory		Bus tie breaker is open due to an AC electrical system fault or Bus Tie switch is OFF.
ELEC GEN DRIVE L, R	Advisory		Generator drive oil pressure is low.
ELEC GEN OFF APU	Advisory		APU generator control breaker is open.
ELEC GEN OFF L, R	Advisory		Generator control breaker is open.
ELEC GND HDLG BUS	Advisory		Ground handling bus relay has failed.
ELEC STANDBY SYS	Advisory		A fault is detected in the standby power system.
MAIN BATTERY DISCH	Advisory		Main battery is discharging or hot battery bus is unpowered.

Cabin Systems

[CABIN/UTILITY and IFE/PASS SEATS Power switches with AIMS Block Point 2001 or later Software Update]

Message	Level	Aural	Condition
ELEC CABIN/UTIL OFF	Advisory		Cabin/utility power switch is OFF.
ELEC IFE/SEATS OFF	Advisory		In-flight entertainment system/passenger seats power switch is OFF.